SANDVIK DD311-40 DEVELOPMENT DRILL

TECHNICAL SPECIFICATION

Sandvik DD311-40 is a single boom electro-hydraulic jumbo for fast and accurate drilling in drifting and tunneling of 40 m² cross sections. The hydraulic controls enable accurate and efficient drilling performance.

The HLX5 rock drill has proven to be efficient and powerful. Optimal coverage is achieved with the robust SB40 boom. The drilling performance can be improved with optional instrumentation.

Sandvik DD311 is the successor of the well-known Sandvik DD310 and offers easier maintenance.

HYDRAULIC ROCK DRILL

Rock drill		HLX5
Percussion power		20 kW
Percussion pressure		Max. 220 bar
Percussion rate		67 Hz
Rotation speed		Max. 250 rpm (with OMS80)
Rotation torque		400 Nm (with OMS80)
Hole size (drifting)	43 - 64 mm	1"¾ - 2"½
Hole size (cut hole)	76 -127 mm	3" - 5"
Recommended rod		T38 - R32 T38 - Alpha 330 T38 - R35
Shank adapter		T38 (male)
Weight	210 kg	462.9 lb
Length	955 mm	37.6 in
Profile height	87 mm	3.4 in
Shank lubrication device		Air / oil mist, SLU-1
Air consumption		250 - 350 l/min
Oil consumption		180 - 250 g/h
Inflating device for accumulator		See spec sheet 2-9110

BOOM

Boom		SB40
Parallel coverage	44.5 m^2	146 ft^2
Parallelism		Automatic hydraulic
Boom extension	1050 mm	41.3 in
Boom weight, net	2100 kg	4630 lb
Roll-over angle		358°

FEED

Feed		TF500-12
Feed force		Max. 25 kN
Feed extension	1350 mm	53 in

FEED DIMENSIONS

Feed TF500	Total Length	Hole Length	Rod Length	Net Weight
10 ft*	4660 mm	2830 mm	3090 mm	470 kg
	183.4 in	111.4 in	121.6 in	1036 lb
12 ft	5270 mm	3440 mm	3700 mm	500 kg
	207.4 in	135.4 in	145.6 in	1102 lb
14 ft*	5880 mm	4050 mm	4305 mm	530 kg
	231.4 in	159.4 in	169.4 in	1168 lb
16 ft*	6490 mm	4660 mm	4915 mm	560 kg
	255.5 in	183.4 in	193.5 in	1234 lb

*Alternative options features/components ** Additional options features/components

HYDRAULIC SYSTEM

Powerpack		HPP555 (55kW)
Percussion pump		100 cc (variable)
Rotation pump		32 cc (gear)
Filtration size		20 micron (pressure)
		10 micron (return)
Oil tank volume	180 liters (drilling)	47.5 US gal
	55 liters (tramming)	14.5 US gal
Tank filling		Manual pump
Oil cooler		Water cooled. Cooling capacity 1 x 30 kW
Tools set for hydraulic adjustment		See spec sheet 2-9100

CONTROL SYSTEM

Type	THC560, hydraulic
Manual boom control	Direct control
	Fully proportional
	Hydraulic parallelism
Drilling control	Manual collaring Feed/percussion control Anti-jamming system
Automatic cycle	Stop and return automatics

ELECTRIC SYSTEM

Total input power	70kW
Main switch	MSE 5
IP classification	See spec sheet TS2-132
Standard voltages	380-690 VAC
Starting method	DOL Direct on line (not recommended for 380VAC - 480VAC)
Voltage fluctuation	± 10%
Automatic cable reel	TCR 1
Cable reel control (in & out)	Operator station + remote control at rear machine
Sealed AGM batteries	2 x 12 V, 95 Ah, 850 A
Front lights (combined working and driving)	2 x 35 W HID + 2 x 70 W (24V)
Rear working lights	2 x 70 W (24V)
Rear driving lights	2 x 70 W (24V)
Parking rear brake/park lights	2 x Red LED

FLUSHING SYSTEM

Flushing	Water
Water pump type	WBP1
Water pump capacity	43 l/min
Water pump inlet pressure	2 bar (Min.)
Flushing water pressure	10 - 15 bar
Air compressor	CTN10, 1m³/min (7bar)

TRAMMING & OPERATOR STATION

Tramming speed	Horizontal: 12 km/h	7.4 mph
	14% = 1:7 = 8º 5.0 km/h	3.1 mph
Gradeability / Inclination	Max. 15º / 5º	
Safety canopy FOPS (Mini - Maxi)	FOPS/ROPS (ISO3449 / ISO3471) ROPS , 15700 kg 2430 mm - 2930 mm 95.6 in - 105.3 in	
Operation	Standard drilling, seated tramming	
Sound pressure level according to EN791	Operator station: < 95 db(A)	
Seat	Ergonomic, adjustable for tramming including seat belt	

CARRIER

Carrier	NC5	
Carrier type	Wheel mounted, frame steering	
Frame steering	± 40º	
Rear oscillation	± 10º	
Ground clearance	320 mm	12.5 in
Diesel engine	Deutz BF4M2011, 62kW. Tier 2, Stage 2	
Diesel engine control	Electronic, EMR	
Exhaust catalyzer	Standard	
Transmission	Hydrostatic, automotive	
Axles	Spicer 112 with extended differential breathers	
Tires	12.00-20	
Service brakes	Hydrostatic and positive braking	
Brakes parking emergency	Hydraulic oil immersed multiple disc brakes on both brakes	
Fuel tank	80 liters	21.1 US gal
Hydraulic jacks	Telescopic (front)	
	Vertical (rear)	
Total weight Depending on options	Around 15000 kg	Around 33070 lb

*Alternative options features/components ** Additional options features/components

OPTIONS & PACKAGES

Boom	
Boom*	SB40NV instead of SB40
Feed	
TF feed lengths*	10, 14, 16 ft
Telescopic feed*	TFX6/12. 8/14
Drilling option	
Rod retainer**	TRRI included safety wire Adds 35mm length of the TF-Feed
Two rod system**	TRS included TRR1 & Safety wire
Instrumentation	
Angle**	TMS D1
Hydraulic system	
Tank filling*	Electric pump
Biodegradable oils*	Shell Naturelle HFE46/HFE68
Control system	
Constant speed drilling**	Replaces feed / percussion control
Cleaning system	
Pressure cleaning system with reel**	Max. 15 bar
HP cleaning system with reel**	Max.180 bar
Greasing system	
Centralized greasing points**	Carrier
Greasing unit with pump, reel and nozzle**	Manual
Automatic greasing system**	Carrier and booms
Electric system	
Optional voltage*	1000 VAC, 50 Hz
Starting method*	Star delta starter (N/A for 660/690VAC and 1000VAC) Soft starter N/A >600VAC
Automatic phase inverter**	N/A for US/CAN and 1000 VAC
Electric cable rubber or PUR**	Depending on voltage (specTS2-121)
Auxiliary outlet**	1 x 230 VAC on main switchgear door
Sensors in the jacks**	Indicator light for jacks up
Battery jump start**	
Extra working lights (front)**	2 x 35 W HID (24V)
Amber strobe light**	LED (24V)
Flushing system	
Air mist flushing**	See spec 5-9510
Water flushing with air cleaning of hole**	External water + 2x60l air receivers External water + CTN16 (11kW)
External air connection**	IP5 air cleaner
Water hose reel with water hose**	THR + 32 mm (1"¼); 80 meters
Water hose with hooks**	32 mm (1"¼); 80 meters
Additional air for hole cleaning with air**	2 x 60l air receiver
Fire suppression system	
Handheld fire extinguisher**	1 x 6kg, Type ABC, Desautel
Manual fire suppression system**	Ansul, 6 nozzles (incl.1 x extinguisher)
Auto fire suppression system**	Ansul, 6 nozzles (incl.1 x extinguisher)
Tramming & operator station	
Seat*	T back seats
Front screen protection bar**	
Carrier	
Diesel engine*	Deutz TCD2012,74kW,Tier 3,Stage 3A
Tires*	Foam filled tires
Fast filling systems**	Complete
Wheel chocks and holders**	2 pieces
Brake release**	Manual hand pump
Reversal rotation for cleaning**	Engine cooler and fan tramming oil cooler fan
Extra items	
Ground fault and overcurrent protection**	VYK
Spare rock drill**	
Spare wheel assembly**	Standard or foam filled
Special tools for rock drill**	
Documentation**	Extra manuals
Packages	
Regional packages**	LAM, USC, AUS
Harsh water package**	Basic or advanced (spec TS2-049)

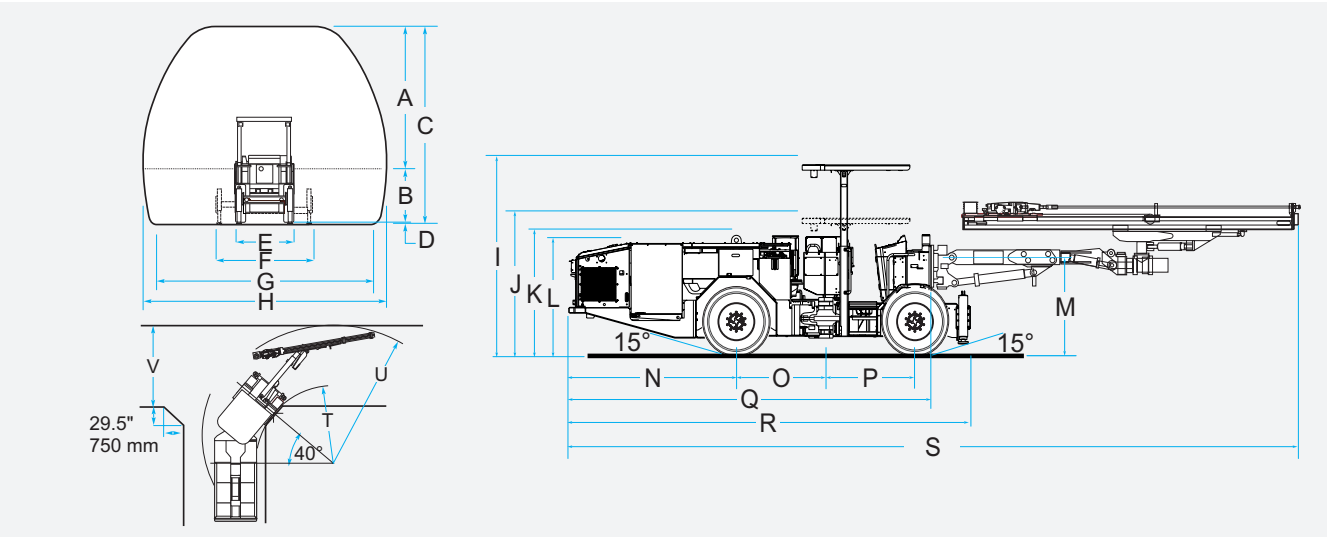

DIMENSIONS - DRILLING									
		COVERAGE AREA							
Model	Units	A	B	C	D	E	F	G	H
DD311-40	mm	3990	1590	5830	250	1875	3070	6860	7210
	in	157	62.5	229.5	9.8	73.8	120.8	270	283.8

DIMENSIONS - TRAMMING															
		MACHINE DIMENSIONS											CORNERING		
Model	Units	I	J	K	L	M	N	O	P	Q	R	S	T	U	V
DD311-40 TF510*	mm	3100	2140	1950	1830	1590	2810	1500	1500	6075	6735	11820	3180	6168	4245
	in	122	84.2	76.7	72	62.5	110.6	59	59	239.1	265.1	465.3	125.2	242.8	167.1
DD311-40 TF512	mm	3100	2140	1950	1830	1590	2810	1500	1500	6075	6735	12370	3180	6290	4245
	in	122	84.2	76.7	72	62.5	110.6	59	59	239.1	265.1	487	125.2	247.6	167.1
DD311-40 TF516*	mm	3100	2140	1950	1830	1590	2810	1500	1500	6075	6735	13020	3180	7000	4800
	in	122	84.2	76.7	72	62.5	110.6	59	59	239.1	265.1	512.5	125.2	275.5	188.9
DD311-40 TFX6/12*	mm	3100	2140	1950	1830	1590	2810	1500	1500	6075	6735	11905	3180	6230	4245
	in	122	84.2	76.7	72	62.5	110.6	59	59	239.1	265.1	468.6	125.2	245.2	167.1
DD311-40 TFX8/14*	mm	3100	2140	1950	1830	1590	2810	1500	1500	6075	6735	11905	3180	6230	4245
	in	122	84.2	76.7	72	62.5	110.6	59	59	239.1	265.1	468.6	125.2	245.2	167.1

DISTRIBUTOR:

Sandvik Mining reserves the right to make changes to the information on this data sheet without prior notification to users. Please contact a Sandvik representative for clarification on specifications and options.

www.mining.sandvik.com

© Sandvik Mining 2014 SANDVIK is a registered trademark owned by Sandvik Intellectual Property AB in Sweden and other countries.